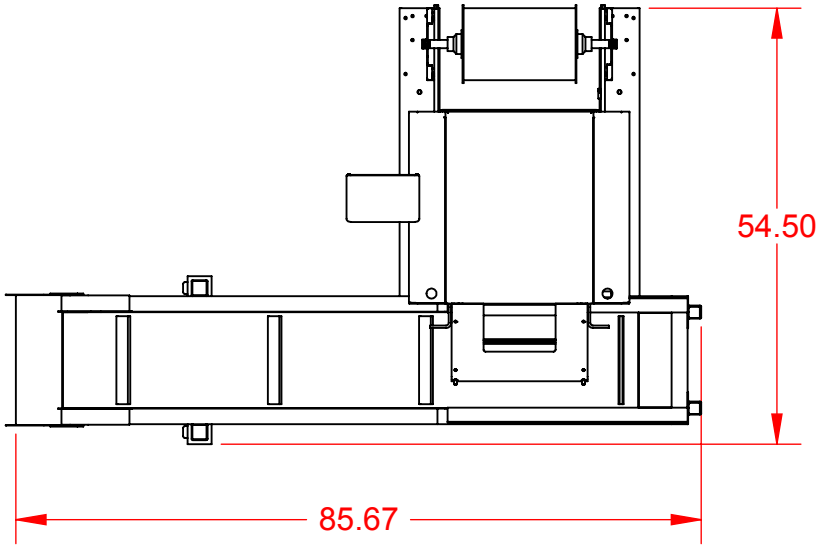

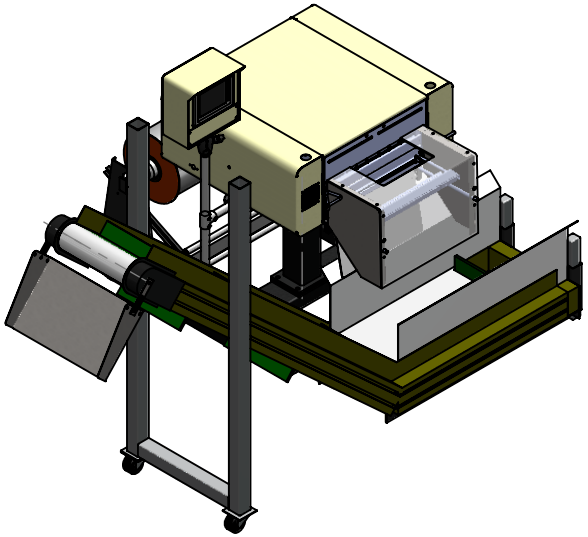

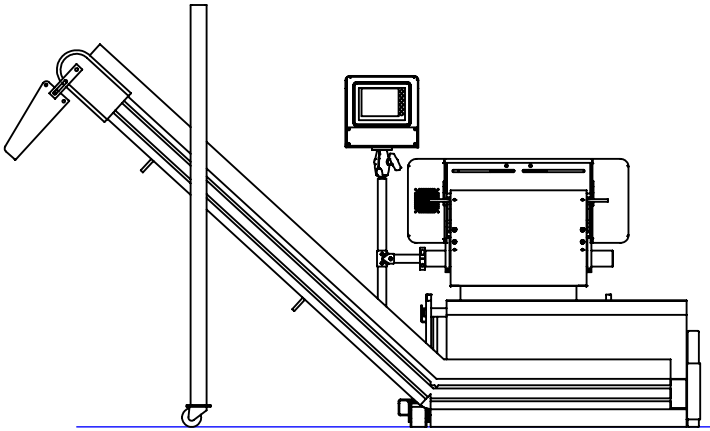

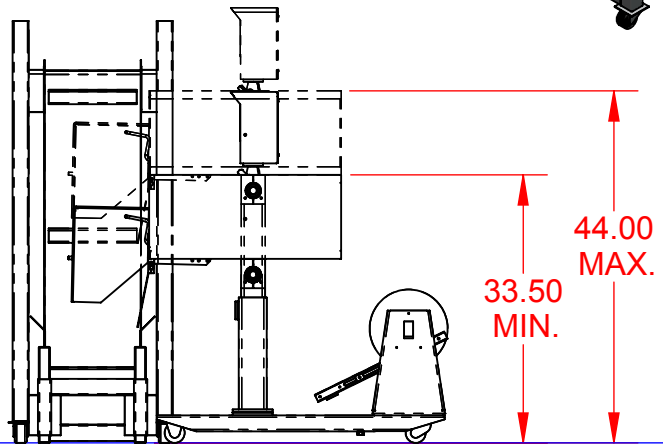

DIMENSIONS ARE IN INCHES
TOLERANCES:
FRACTIONAL: ±1/64
ANGULAR: MACH: ±1°
TWO PLACE DECIMAL: ±0.010
THREE PLACE DECIMAL: ±0.003
UNLESS OTHERWISE SPECIFIED

PROPRIETARY AND CONFIDENTIAL

THE INFORMATION CONTAINED IN THIS DRAWING IS THE SOLE PROPERTY OF *Advanced Poly-Packaging, Inc.* ANY REPRODUCTION IN PART OR AS A WHOLE WITHOUT THE WRITTEN PERMISSION OF *APPI* IS PROHIBITED.

Advanced Poly-Packaging, Inc.
1331 Emmitt Road • Akron, OH 44306 • 1-800-754-4403 • fax 330-785-4010 • www.advancedpoly.com

DESCRIPTION: T-1000 WITH TAKE-AWAY

BOM REF:	DRAWN: C.N.L. *8/22/2013*
NUMBER REQ'D: 1	APPROVED: *Chuck La Chance*
MATERIAL:	PROJECT: FOR REFERENCE ONLY
FINISH:	P/N:

SIZE	DWG. NO.	REV
A	T-1000-S14 WITH TAKE-AWAY	
SCALE: 1:24	WEIGHT: 590.95#	SHEET 1 OF 1

REMOVE ALL SHARP EDGES

5 4 3 2 1